VSE

# SCREENING BUCKETS

PATENT SIMEX

## Screening bucket with adjustable output size.

Authorised SIMEX dealer in WA

1300 921 498 | sales@trswa.com.au | totalrockbreaking.com.au
13 Panama Street, Canning Vale WA 6155

TRS Total Rockbreaking Solutions

ADVICE AND SUPPORT YOU CAN TRUST

- Designed for **separating different-sized materials** on the work site.

- **Big increase in productivity:** PATENT SIMEX
Drums are composed of elements with varying-sized disks, whose differentiated peripheral speed produces an intense whirling of the material to be screened.

**Easy loading.** Wide mouth, shaped as standard bucket.

**Extremely easy operation.**

## TECHNICAL SPECIFICATIONS

| | VSE 20 | VSE 30 | VSE 40 | |
|---|---|---|---|---|
| **Recommended excavator weight (1)(2)** | 12 - 18 | 16 - 30 | 25 - 40 | ton |
| Outlet width | 1100 | 1260 | 1100 | mm |
| Total width | 1485 | 1650 | 1600 | mm |
| Bucket capacity (SAE) | 0,60 | 0,85 | 1,40 | $m^3$ |
| Screening area | 0,80 | 0,95 | 1,20 | $m^2$ |
| Shaft travel | 40 | 40 | 30 | mm |
| Number screening shafts | 2 | 2 | 3 | n° |
| **Operating weight (3)** | 1280 | 1790 | 2400 | kg |
| **Required oil flow** | 80 - 130 | 150 - 200 | 170 - 220 | l/min |
| **Required oil pressure** | 250 - 200 | 250 - 200 | 250 - 200 | BAR |

(1)The maximum operating load permitted for the excavator, when added to the weight of the standard bucket, must match or exceed the weight of the crusher bucket at full load.
(2)User is responsible for ensuring that the equipment meets the excavator's specifications and weight requirements.
(3) Without mounting bracket.

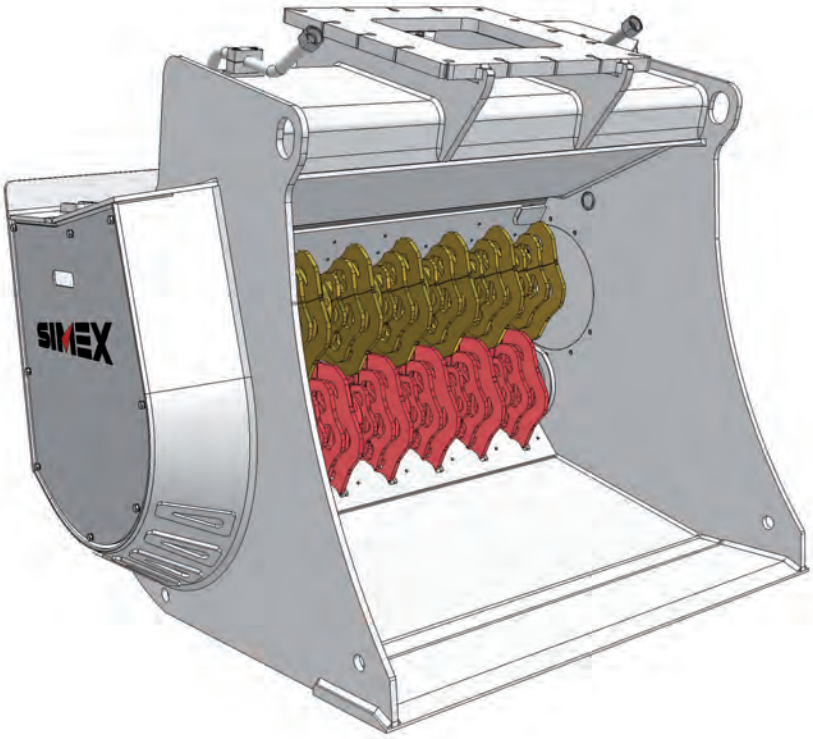


■ **Quick adjustment of output size.**

The Simex-patented mechanism allows the screening bucket drums to be distanced or closed by means of a hydraulic system. This feature makes it possible to vary the output size of the screened material in only seconds via an operator control directly in the cabin.

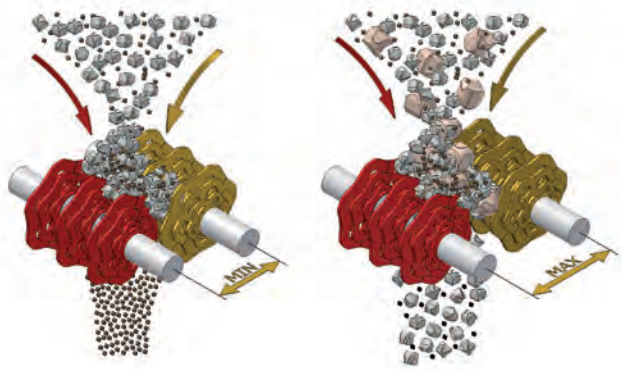


■ Also available in version with mechanical adjustment.

■ **Adjustment of output size from operator's seat.**

■ **Easily replaceable screening elements.**

Different screening element designs available for a
a variety of materials.
Tool replacement is quick and does not require shaft disassembly.

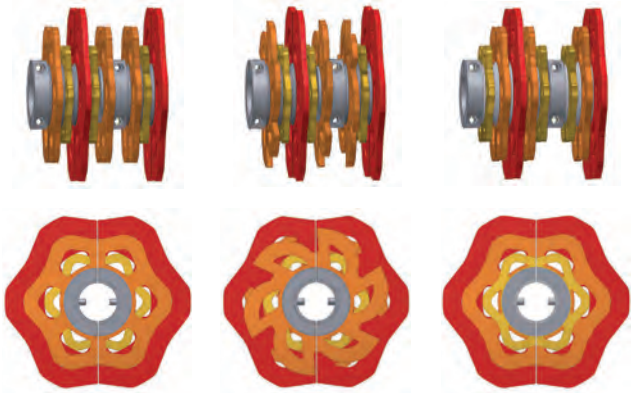

SIMEX

SIMEX